Senseca Germany GmbH
Tenter Weg 2-8 | 42897 Remscheid | GERMANY
Phone +49 2191 9672-0 | info(at)senseca.com

Produktinformation

Temperature-Meter T1010

- **Measuring input Pt100 -100.0..+600.0 °C**
  Pt1000 -50.0..+200.0 °C
- **LED-Display 14.2 mm red, indicating range ±9999(0) Digit**
- **Max. 2 alarm outputs, relay SPDT**
- **Analog output 0/4..20 mA, 0/2..10 V**
- **Field case with snap lid, 2 x M16x1.5**

Characteristics

The Temperature-Meter T1010 is suitable for measurement of temperatures in connection with RTD sensors Pt100, Pt1000. Devices for other temperature sensors are available on request. The measuring input is isolated. The measuring range can be limited in the configuration level. This is identical with the range of the analog output.

Technical data

Power supply
Supply voltage : 230 V AC ±10 %; 115 V AC ±10 %, 24 V AC ±10 % or 24 V DC ±15 %
Power consumption : max. 3.5 VA
Operating temp. : -20..+55 °C
Conformity : CE
Input
Pt100; Pt1000 : -100..+600 °C ; -50..+200 °C
Accuracy : Pt100 or Pt1000 < 0.1% ±2 Digit, max. 100 Ω line resistance
Display : LED red, 14.2 mm
Indicating range : ±9999(0) digit, with leading zero suppression
Additional display : LED 2-digit red, 7 mm (Parameter - and output indicator)
Output
Relay : SPDT < 250 V AC < 250 VA < 2 A, < 300 V DC < 50 W < 2 A
Analog : 0/4..20 mA burden ≤ 500 Ω; 0/2..10 V burden > 500 Ω, **no** isolation, automatic output changing (burden dependent)
- Accuracy : 0.1 %; TK 0.01 %/K
Field case : Material PA6-GF/GFK 15/15
Dimensions : 100x100x60 mm
Weight : max. 450 g
Cable gland : 2 x M16x1.5
Connection : clamp terminals, 0.08..1.5 mm², AWG28..AWG14
Protection class : front IP65, terminals IP20 acc. to BGV A3

Dimensions

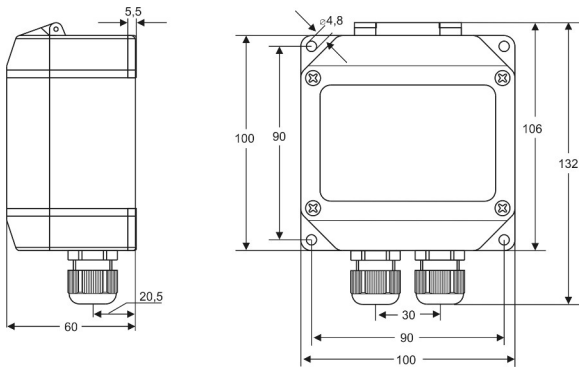

Connection diagram

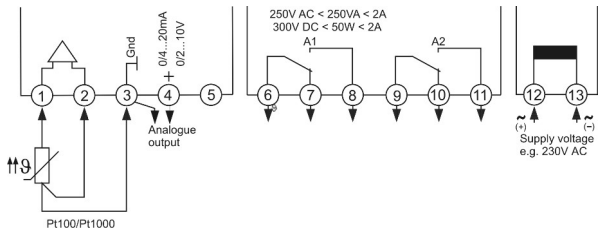

Ordering code

T1010 - 1. [ ] - 2. [ ] - 3. [ ] - 4. [ ] - 5. [ ] - 6. [ ] - 7. [ ]

1.	**Input**		
	1	Pt100	-100.0..+600.0°C
	3	Pt1000	-50.0..+200.0°C
2.	**Alarm output**		
	00	not installed	
	2R	2 relay SPDT	
3.	**Analog output**		
	00	not installed	
	AO	analog output 0/4..20 mA, 0/2..10 V DC	
4.	**Supply voltage**		
	0	230 V AC	±10 % 50-60Hz
	1	115 V AC	±10 % 50-60Hz
	4	24 V AC	±10 % 50-60Hz
	5	24 V DC	±15 %
5.	**Options**		
	00	without option	
	01	min-max-value hold	
	07	display brightness programmable	
	09	1xM20x1.5 multi (2xØ 6 mm), 1xM20x1.5	
6.	**Unit** (appears in the unit field)		
7.	**Additional text** above the display (3x70 mm HxW)		